Plugs for pluggable terminal blocks ／ EC & ESD series

EC762HVN

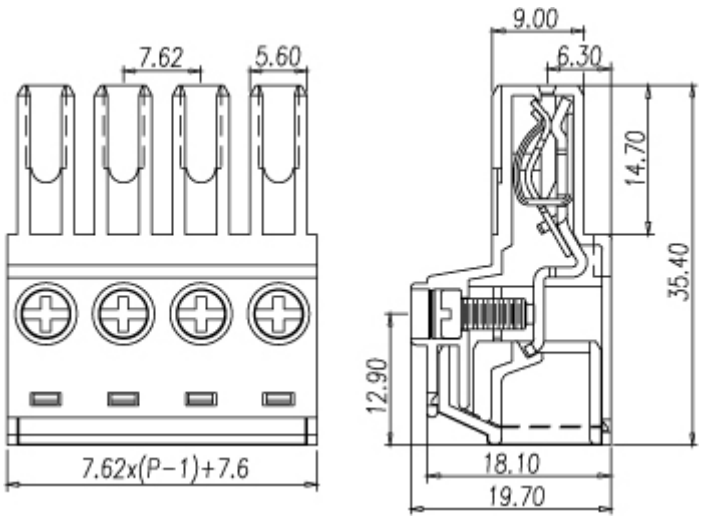

Pitch: 7.62mm

Approval		
Technical Data	UL	IEC
Rated voltage	300V	800V
Rated current	30A	41A
Conductor cross-section, solid (AWG/ mm^2)	30~8 / 0.5~6	
Conductor cross-section, flexible (AWG/ mm2)	30~8 / 0.5~6	
Rated surge voltage (UL/IEC/Max.)	1.6 / 3.5 / KV	
Torque (N-m)	0.69	
Screw	M3	
Wire strip length	7~8mm	

Pole	Cat. No.
02	EC762HVN-02P
:	:
:	:
12	EC762HVN-12P

Copyright ,DINKLE ENTERPRISE CO., LTD. All Right Reserved.